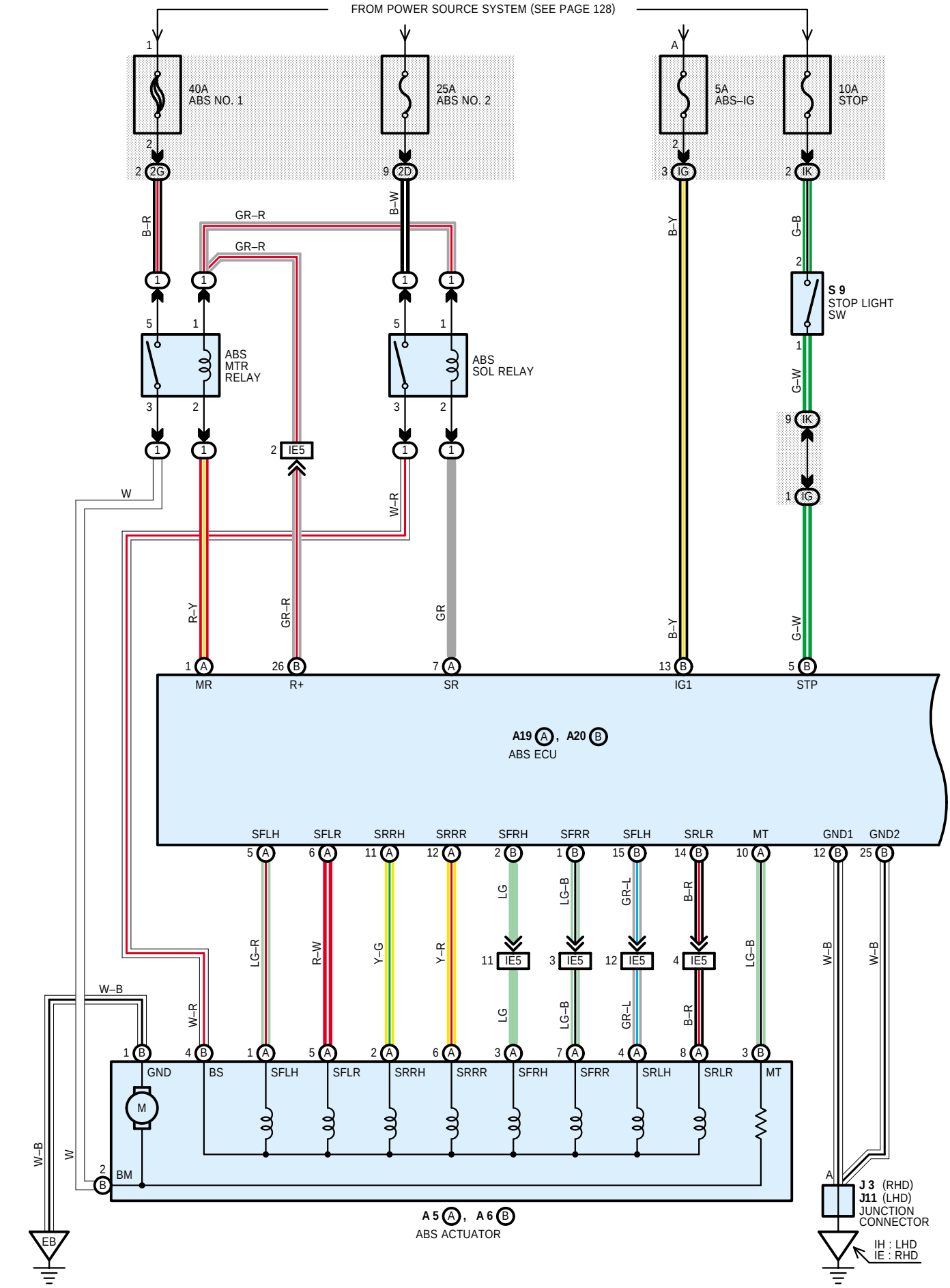
FROM POWER SOURCE SYSTEM (SEE PAGE 128)
40A
ABS NO. 1
25A
ABS NO. 2
5A
ABS–IG
10A
STOP
S 9
STOP LIGHT
SW
ABS
MTR
RELAY
ABS
SOL RELAY
IE5
MR
R+
SR
IG1
STP
A19 A, A20 B
ABS ECU
SFLH
SFLR
SRRH
SRRR
SFRH
SFRR
SFLH
SRLR
MT
GND1
GND2
GND
BS
SFLH
SFLR
SRRH
SRRR
SFRH
SFRR
SRLH
SRLR
MT
BM
A 5 A, A 6 B
ABS ACTUATOR
J 3 (RHD)
J11 (LHD)
JUNCTION
CONNECTOR
IH : LHD
IE : RHD
EB

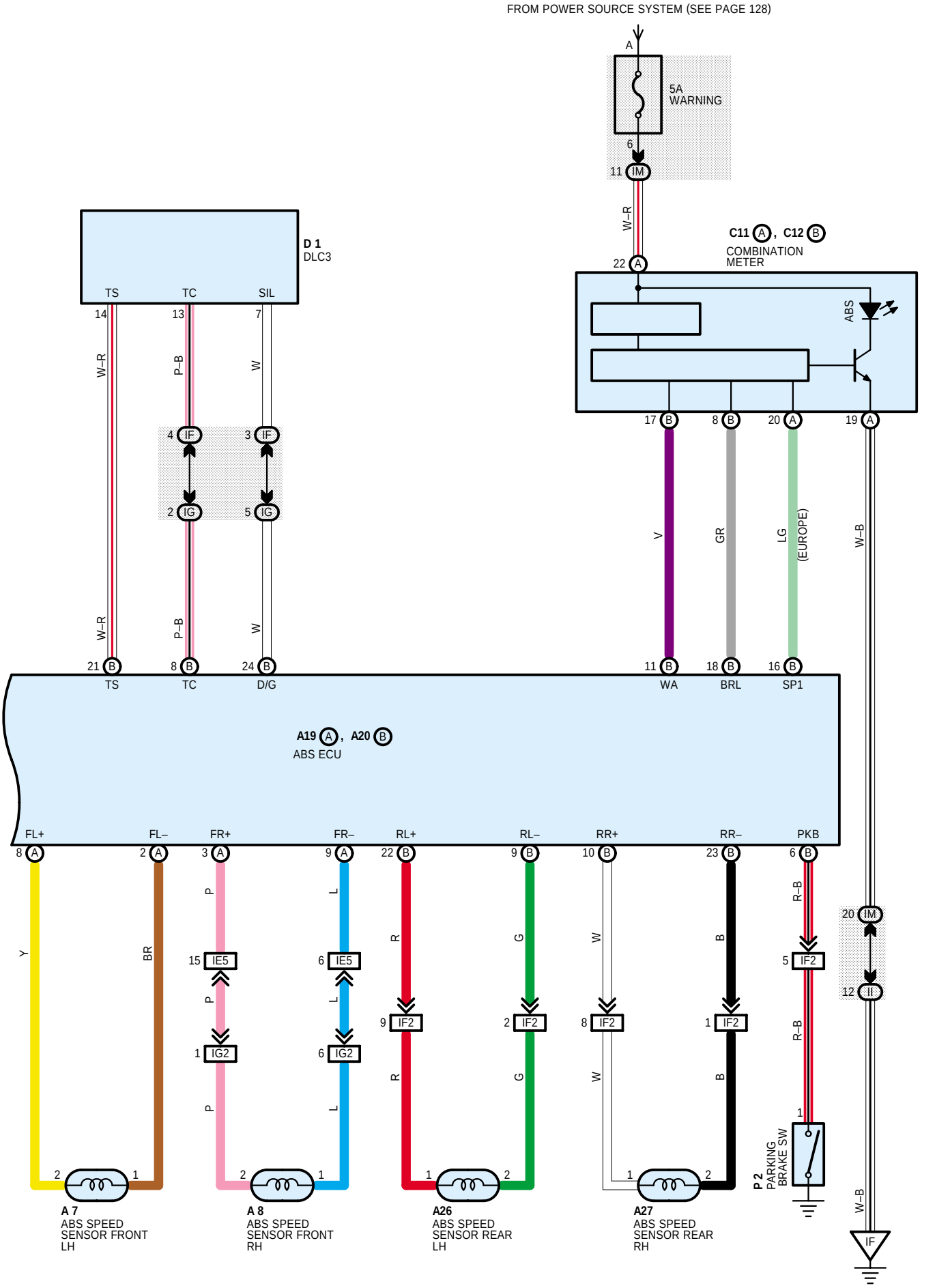
FROM POWER SOURCE SYSTEM (SEE PAGE 128)
A
5A
WARNING
6
11 IM
W–R
22 A
C11 A , C12 B
COMBINATION
METER
ABS
D 1
DLC3
TS
TC
SIL
14
13
7
W–R
P–B
W
4 IF
3 IF
2 IG
5 IG
17 B
8 B
20 A
19 A
V
GR
LG
(EUROPE)
W–B
21 B
8 B
24 B
11 B
18 B
16 B
TS
TC
D/G
WA
BRL
SP1
A19 A , A20 B
ABS ECU
FL+
FL–
FR+
FR–
RL+
RL–
RR+
RR–
PKB
8 A
2 A
3 A
9 A
22 B
9 B
10 B
23 B
6 B
Y
BR
P
L
R
G
W
B
R–B
15 IE5
6 IE5
9 IF2
2 IF2
8 IF2
1 IF2
5 IF2
20 IM
12 II
1 IG2
6 IG2
1
2
A 7
ABS SPEED
SENSOR FRONT
LH
A 8
ABS SPEED
SENSOR FRONT
RH
A26
ABS SPEED
SENSOR REAR
LH
A27
ABS SPEED
SENSOR REAR
RH
P 2
PARKING
BRAKE SW
IF